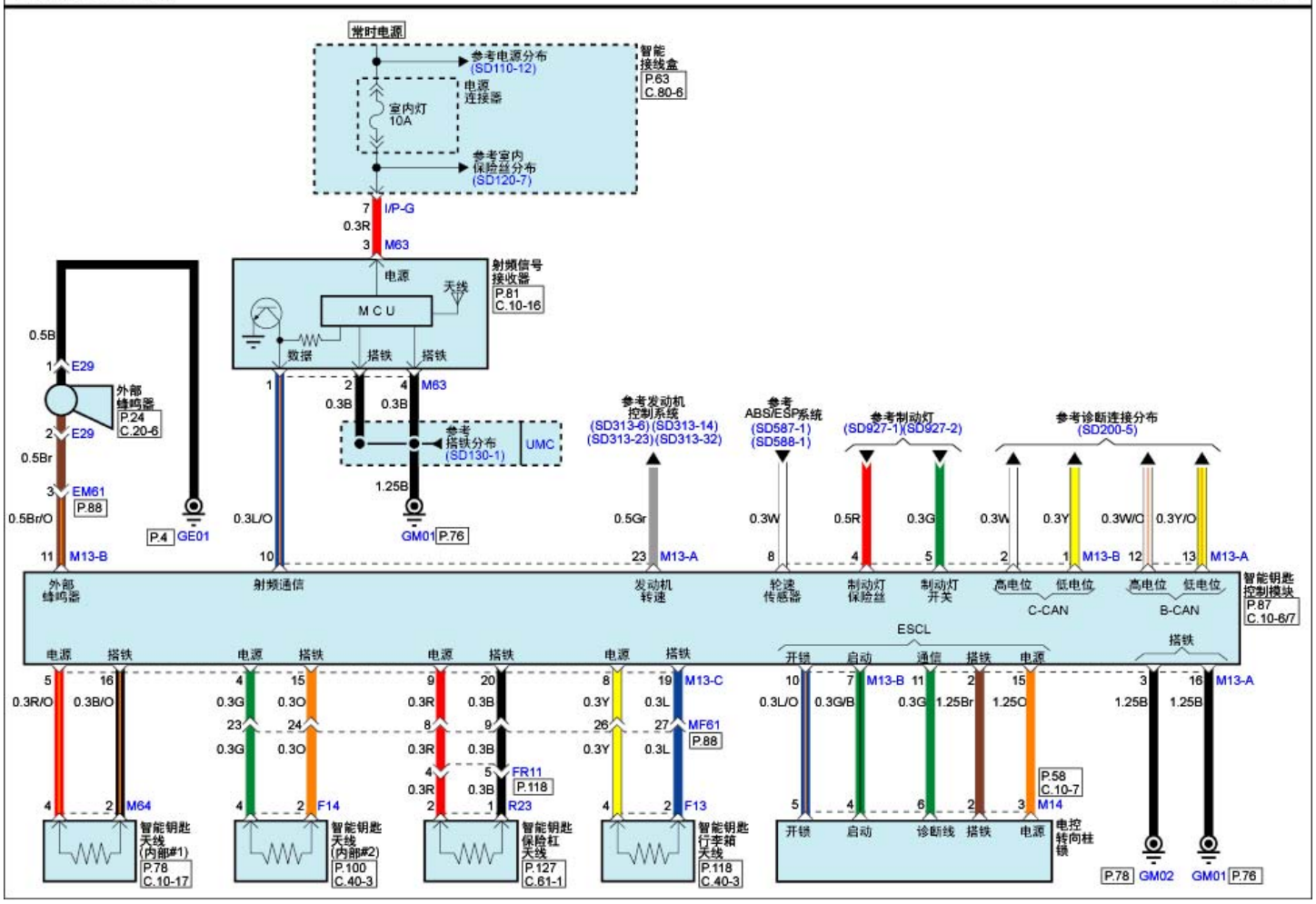智能钥匙模块(3) SD954-4